PRODUCT EVALUATION

(Florida Product Approval)

DYNAMIC METALS

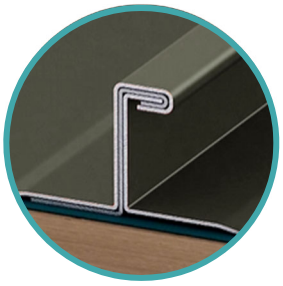

DM Class 1150

FL# 41724.5-R3

1” Mechanical (21” Wide)

.032”, .040”, & .050” Aluminum
Approved

Approved for installation **outside** of the **HVHZ** (Miami-Dade & Broward counties)

Panel Material
032 Aluminum (min) *Corrosion resistant per FBC 1507.4.3 (non-HVHZ)*

Panel Description
Non-Structural steel roof panel with 1” tall rib (nominal) and 21” (max) coverage

Deck/Substrate
15/32” (min) 4-ply CDX plywood or ¾” (min) thick wood plank *(min S.G. of 0.42).* nailed to 2x rafters spaced 24” O.C. with 8d ring-shank nails spaced 6” (max) O.C.

Available Options
.040” and .050” Aluminum also available and acceptable.
17” and 13” widths also available and acceptable.

OPTION 1

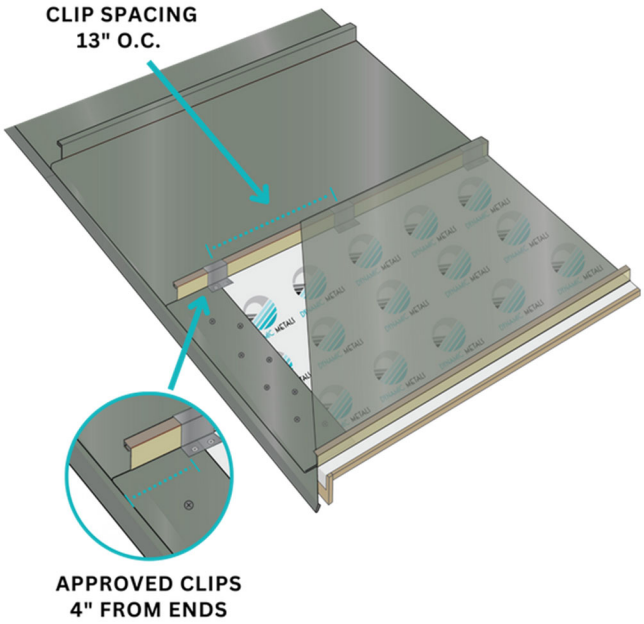

	Option #1 Installation
Max. Design Pressure	-131 psf
Clip Anchor Spacing	4” From Ends, 13”” Max. O.C.
Min Panel Fasteners	#10x1” Panclip Fastener (2) per clip
Panel Seam	Panels are Seamed to 90°

Notes:

1) Compare *allowable* pressures required for the project to the maximum allowable design pressure above and select any option which meets or exceeds the pressures required for the project
2) Installation graphics on this page are provided as a generic visual representation; specific written text in this product approval & applicable building code shall take precedence
3) A factor of safety of 2.0 has been applied.

Non-High Velocity Hurricane Zone (Non-HVHZ)
This product *is approved for installation* ***outside*** the HVHZ (Miami-Dade & Broward counties). References to HVHZ sections of the FBC (e.g. Fire Barrier) generally do not apply when the product is installed outside of the HVHZ

Underlayment:
Comply with FBC 1507.1.1 (non-HVHZ), and per local codes

Slope:
Comply with FBC 1507.4.2 (non-HVHZ), and per local codes.
OUTSIDE the HVHZ, FBC 1507.4.2 minimum slope is 1/4:12

Trim and Flashing Details:
Comply with manufacturer's recommendations and RAS 133

Re-Roofing:
This panel may be installed over a single layer of existing shingles as permitted by local building code or FBC 1511, provided the existing roof meets the conditions required by the applicable code. Size fasteners to fully penetrate ¼" (min) through substrate

Fire Barrier:
Comply with FBC 1516.1 and 1516.2 where required
Where not required by code. Fire classification is not a part of this evaluation
Where required, refer to a current fire directory listing for fire ratings of this roofing system assembly as well as the location of the fire barrier within the assembly

Technical Documentation
1) This product has been tested to meet the standards listed below by Intertek Testing (TST-152)
2) Per reports **K9009.03-450-18, K9009.05-450-18, and M1607.02-450-44**, signed and sealed by Vinu Abraham, PE, and by PRI Construction Materials Technologies, per test reports **VLS-004-02-01** and **VLS-005-02-01.**
3) Drawing 1AMS21, dated 2/17/24 (Rev. 1), signed and sealed by Scott Wolters, PE.
4) Supplemental Calculations to support 1AMS21, signed & sealed by Scott Wolters, PE.
5) Test Reports used for evaluation are owned by **Lara's IP & Research, LLC.**, and used with prior written permission.

Compliance Statement:
Reviewed per the FAC Product Approval Rule, Chapter 61G20-3.005 (4), this product, as described in this report and drawing 1AMS21, meets all of the requirements of sections 1504.3.2 (**non-HVHZ**) and 1518.9/1523.6.5.2.4 (**HVHZ**) of the 8th Edition (2023) Florida Building Code.

This product as described has been tested and demonstrated compliance with
UL580 – Test for Uplift Resistance of Roof Assemblies
UL 1897 – Uplift test for roof covering systems
TAS 125 – Standard Requirements for Metal Roofing Systems
TAS 100 - Wind and Wind-Driven Rain
TAS 110 – Physical Properties of Roofing Components

Panel Labeling:
Products sold in the HVHZ that require labeling shall bear the following or similar label. Other labeling in accordance with FBC 1523.5 shall also be permitted

DYNAMIC METALS

City, State
DM Class 1150 FL #41724.5

Design Process:
Compare the maximum allowable loads to the ASD uplift pressures for the project to determine sufficiency and installation requirements. Determine project uplift pressures using ASCE 7-22, FBC R301, project design documents, guidance from local building department, or other design professionals. Engineering analysis may be completed by other licensed engineers for project specific approval by local authorities having jurisdiction.

Exclusions and Limitations:
Design of deck and roof structure (to include attachment of plywood or wood plank) shall be completed by others. Fire classification and shear diaphragm design are outside the scope of this evaluation.

This report is limited to compliance with structural wind load requirements of FBC 1504.3.2, as required by Rule 61G20-3. Neither Wolters Engineering nor the manufacturer shall be responsible for any conclusions, interpretations, or designs made by others based on this evaluation report. This report is limited solely to documenting compliance with Rule 61G20-3,and makes no express or implied warranty regarding performance of this product. Installation shall be subject to the local building code and authority having jurisdiction.

Panel Forming
Panels may be formed on the jobsite with the following Dynamic Metals, LLC approved machines, under a quality assurance program audited by an approved 3rd. party QA auditor

SSP-10751007, 5VC-0700123, SSQ2U-6470323, SSQ2U-6480323, SSQ-6800617, SSQ-6690517, 5VC-0490718, SSQ-5150216, SSQ-4560615, 5VC-0360516, SSQ-6810617, SSQ2U-4031121, SSQ2U-4041121, SSQU-4051121

If you have any questions or need more information concerning this approval, please contact me

Scott Wolters
FLPE# 62354
Wolters Engineering, Inc.
(COA# 27194)
15211 97th Road N
West Palm Beach, FL 33412
(561) 225-1982

SCOTT WOLTERS LICENSE No 62354 STATE OF FLORIDA PROFESSIONAL ENGINEER

Digitally signed by Scott Wolters
Date: 2025.07.04 00:31:57 -04'00'

© 2025 Lara IP & Research, LLC.
All test data, engineering reports, technical illustrations, line drawings, and related intellectual property contained within this document are the sole property of Lara IP & Research, LLC. Used with permission under written prior written agreement by DYME Metals Association, LLC. for regulatory submittals, internal reference, and lawful distribution to authorized parties only.
Reproduction, redistribution, or commercial use without express written consent from Lara IP & Research, LLC is strictly prohibited.

DYNAMIC CLASS 1150 0.032", 0.040", or 0.050" ALUMINUM
1" MECHANICAL SEAM x 13", 17", or 21" WIDE ROOF PANEL
OVER 1/2" PLYWOOD

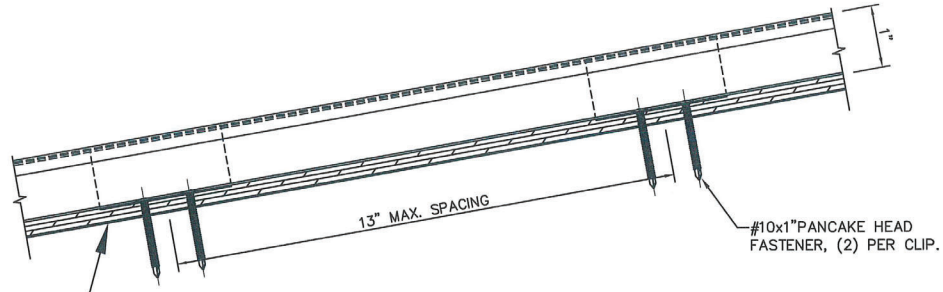

SECTION A–A

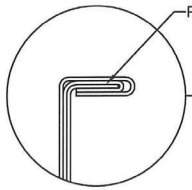

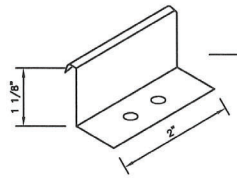

26 Ga. GALV.
STEEL CLIP

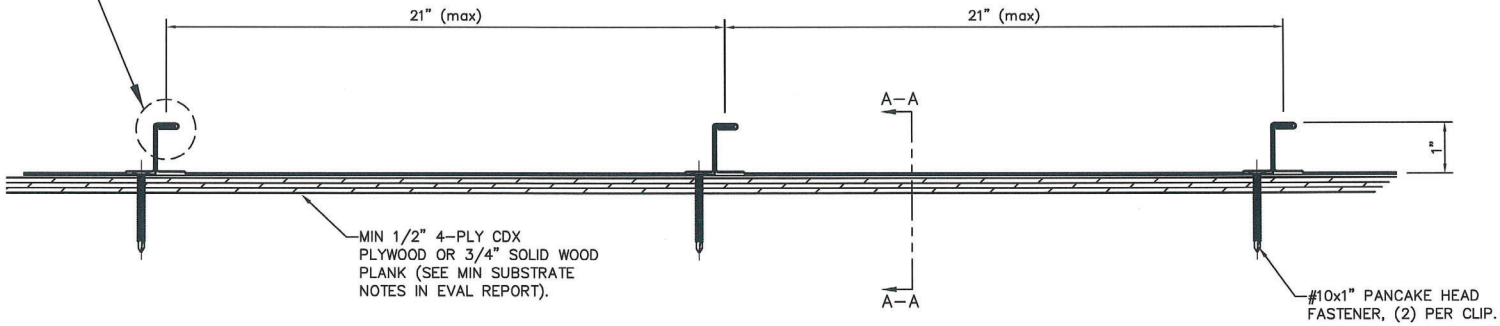

MAX DESIGN PRESSURE
–131 Psf

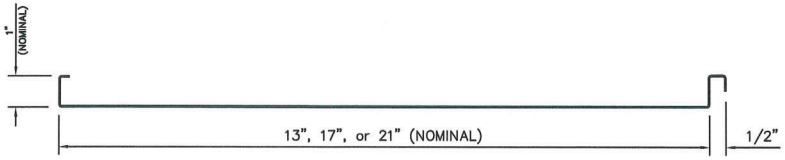

PANEL PROFILE

GENERAL NOTES:

1. ROOF SLOPE IS LIMITED PER THE REQUIREMENTS OF FBC SECTION 1507.4.2.
2. DESIGN OF SUBSTRATE IS BY OTHERS AND NOT A PART OF THIS APPROVAL.
3. ALL PANEL SYSTEM PERIMETERS, PENETRATIONS, AND TRANSITIONS TO BE FLASHED AND SEALED PER THE REQUIREMENTS OF RAS 133.

PRINTS ISSUED FOR	REV.#	DATE
2023 CODE UPDATE	1	2/17/24
1ST SUBMITTAL	–	10/14/22

SCOTT WOLTERS
FL PE# 62354

WOLTERS ENGINEERING
(COA# 27194)
15211 97TH ROAD N
WEST PALM BEACH, FL 33412
(561) 225-1982

SEAL: SCOTT WOLTERS No 62354 STATE OF FLORIDA PROFESSIONAL ENGINEER FEB 17 2024

DYNAMIC METALS

2951 SE DOMINICA TERRACE
STUART, FL 34997

2177 ANDREA LANE
FORT MYERS, FL 33912
www.dynamicmetal.net

PH: (772) 247-2465
FAX: (772) 247-2466
PH: (239) 265-1638
EMAIL: info@dynamicmetal.net

DWG: 1AMS21

SHEET: 1/1